Assembly View

Menu and Program

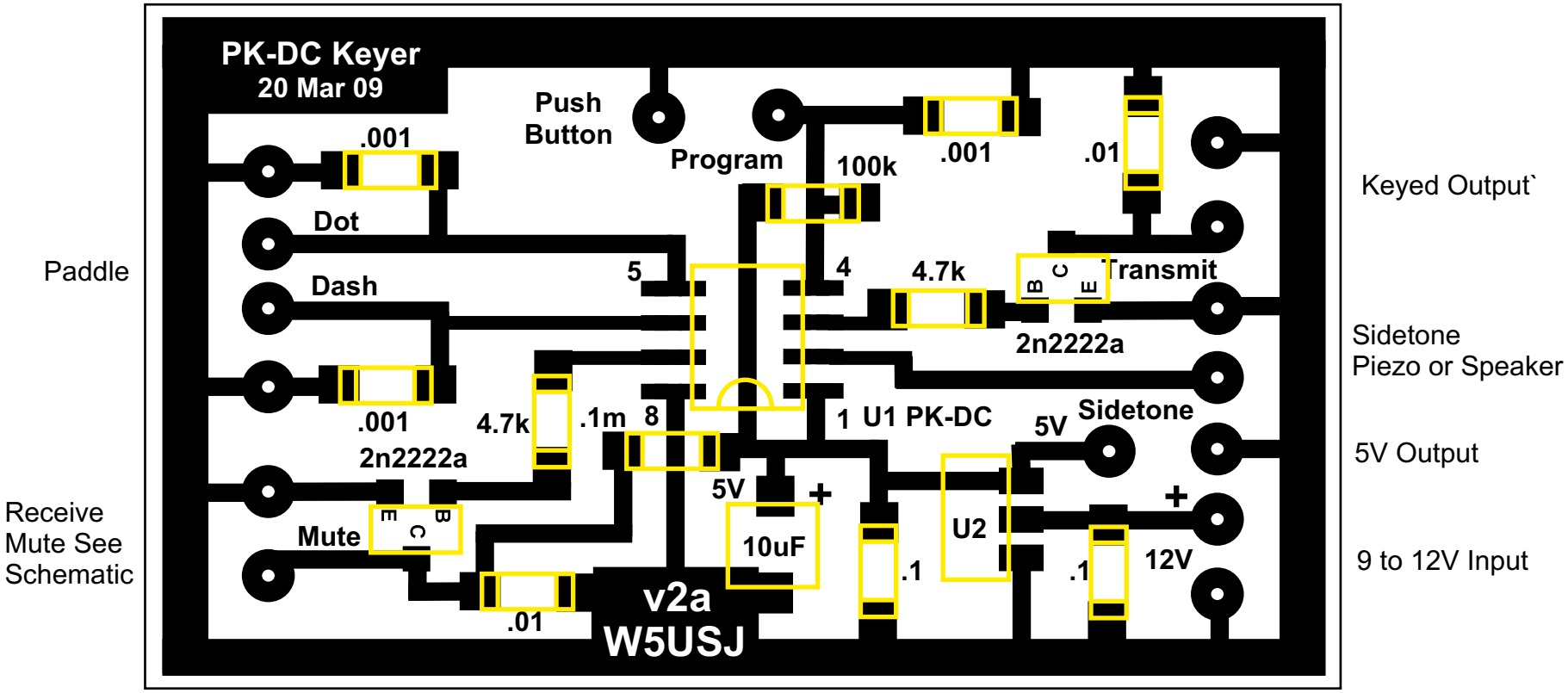

Etched View

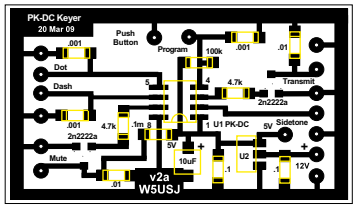

Contact View

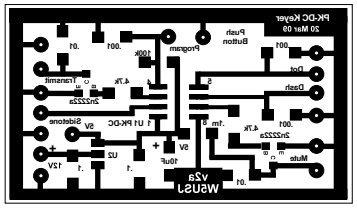

SMT PK-DC
Keyer v2a

W5USJ drawing 20 Apr 09